PERIODIC SPECIAL INSPECTION IS REQUIRED FOR WOOD SHEAR WALLS, SHEAR PANELS, AND DIAPHRAGMS, INCLUDING NAILING, BOLTING, ANCHORING, AND OTHER FASTENING TO COMPONENTS OF THE SEISMIC FORCE RESISTING SYSTEM. SPECIAL INSPECTION BY A DEPUTY INSPECTOR IS REQUIRED WHERE THE FASTENER SPACING OF THE SHEATHING IS 4 INCHES ON CENTER OR LESS

SHEAR WALL SCHEDULE

TYPE	SHEATHING MATERIAL	PANEL NAILING PERIMETER	PANEL NAILING FIELD	BLKG. TO PLATE CONNECTION	PLATE TO BLKG. CONNECTION	ANCHOR BOLTS (U.N.O.)	EMBED. DEPTH	SHEAR, PLF (LRFD)	SHEAR, PLF (ASD)
1	15/32" PLYWOOD STRUCTURAL 1	10d @ 6" O.C.	10d @ 12" O.C.	A35 OR LTP4 @ 16" O.C.	20d NAILS @ 6" O.C.	5/8"ø @ 48" O.C.	9"	544	340
2	15/32" PLYWOOD STRUCTURAL 1	10d @ 4" O.C.	10d @ 12" O.C.	A35 OR LTP4 @ 12" O.C.	SDS 1/4"x6" @ 8" O.C.	5/8"ø @ 32" O.C.	9"	816	510
3	15/32" PLYWOOD STRUCTURAL 1	10d @ 3" O.C.	10d @ 12" O.C.	A35 OR LTP4 @ 10" O.C.	SDS 1/4"x6" @ 6" O.C.	5/8"ø @ 32" O.C.	9"	1064	665
4	15/32" PLYWOOD STRUCTURAL 1	10d @ 2" O.C.	10d @ 12" O.C.	A35 OR LTP4 @ 8" O.C.	SDS 1/4"x6" @ 4" O.C.	5/8"ø @ 24" O.C.	9"	1392	870

1. ALL DIAPHRAGM AND SHEAR WALL NAILING SHALL UTILIZE COMMON NAILS OR GALVANIZED BOX.
2. SOLID BLOCKING SHALL BE PROVIDED AT ALL HORIZONTAL JOINTS OCCURRING IN BRACED WALL PANELS
3. ALL SHEAR WALLS WITH A SHEAR VALUE GREATER THAN 300 LB/FT SHOULD BE PROVIDED:
   a) 3x FOUNDATION SILL PLATES
   b) 3x STUDS AND BLOCKS BETWEEN ADJACENT PANELS
   c) 1/2" EDGE DISTANCE FOR PLYWOOD BOUNDARY NAILING
   d) ALL PANEL JOINT AND SILL PLATE NAILING SHALL BE STAGGERED.
   e) STAGGER NAILS IF NAIL SPACING IS LESS THAN 2" O.C.
   f) SQUARE PLATE WASHERS SHALL BE USED WITH ANCHOR BOLTS
      5/8" ø BOLT - 3"X3"X1/4"
      3/4" ø BOLT - 3"X3"X5/16"
      7/8" ø BOLT - 3"X3"X5/16"
      1" ø BOLT - 3.5"X3.5"X3/8"

NOTES

1. ALL STRUCTURAL WOOD SHALL BE DOUGLAS FIR LARCH SPECIES PER INFORMATION SHOWN ON SHEET A-4 WITH 19% MAXIMUM MOISTURE CONTENT U.N.O.
2. ALL WALLS OVER 10' IN HEIGHT TO BE 2X6 @16" O.C. FRAMING.
3. DOUBLE JOISTS ARE REQUIRED UNDER PARALLEL BEARING PARTITIONS.
4. AN AITC CERTIFICATE OF INSPECTION FOR ALL GLU-LAM BEAMS INCLUDING PARALLAM BEAMS SHALL BE SUBMITTED TO THE BUILDING AND SAFETY DEPT. PRIOR TO ERECTION.
5. GLUE LAM BEAMS MUST BE FABRICATED IN A LADBS LICENSED SHOP. IDENTIFY GRADE SYMBOL AND LAMINATION SPECIES PER T 5A, 2005 NDS SUPP.
6. FIELD WELDING TO BE DONE BY WELDERS CERTIFIED BY THE LADBS FOR STRUCTURAL STEEL, CONTINUOUS INSPECTION BY A DEPUTY INSPECTOR IS REQUIRED.
7. SHOP WELDS MUST BE PERFORMED IN A LADBS LICENSED FABRICATORS SHOP.
8. LADBS LICENSED FABRICATOR IS REQUIRED FOR STRUCTURAL STEEL.
9. ALL WOOD MEMBERS MUST BE GRADE MARKED WITH GRADE AND SPECIES.
10. BEARING WALL STUDS CANNOT BE NOTCHED MORE THAN 25% OF THEIR WIDTH. BORED HOLES CANNOT HAVE A DIAMETER GREATER THAN 40% OF THE STUD WIDTH
11. PROVIDE LEAD HOLE 40%-70% OF THREADED SHANK DIAMETER AND FULL DIAMETER FOR SMOOTH SHANK PORTION.
12. STRUCTURAL OBSERVATION IS REQUIRED FOR ALL PLYWOOD SHEAR WALLS WITH A DESIGN LOAD OVER 300 PLF.
13. ALL DIAPHRAGM AND SHEAR WALL NAILING SHALL UTILIZE COMMON NAILS OR GALVANIZED BOX.
14. ROOF DIAPHRAGM NAILING TO BE INSPECTED BEFORE COVERING. FACE GRAIN OF PLYWOOD SHALL BE PERPENDICULAR TO SUPPORTS. FLOOR SHALL HAVE TONGUE AND GROOVE OR BLOCKED PANEL EDGES. PLYWOOD SPANS SHALL CONFORM WITH TABLE 2304.7
15. EXTERIOR STAIRS AND BALCONIES MUST BE POSITIVELY ATTACHED TO THE STRUCTURE WITHOUT THE USE OF TOE NAILS OR NAILS IN WITHDRAWAL.
16. ALL BOLT HOLES SHALL BE DRILLED 1/32" TO 1/16" OVERSIZED.
17. CONTRACTORS RESPONSIBLE FOR THE CONSTRUCTION OF A WIND OR SEISMIC FORCE RESISTING SYSTEM/ COMPONENT LISTED IN THE "STATEMENT OF SPECIAL INSPECTION" SHALL SUBMIT A WRITTEN STATEMENT OF RESPONSIBILITY TO THE LADBS INSPECTORS AND THE OWNER PRIOR TO THE COMMENCEMENT OF WORK ON SUCH SYSTEM OR COMPONENT PER SEC 1706.1
18. CONTINUOUS SPECIAL INSPECTION REQUIRED BY A REGISTERED DEPUTY INSPECTOR IS REQUIRED FOR FIELD WELDING, CONCRETE STRENGTH F'C-2500 PSI, HIGH STRENGTH BOLTING, SPRAYED-ON FIREPROOFING, ENGINEERED MASONRY, HIGH-LIFT GROUTING, PRE-STRESSED CONCRETE, HIGH LOAD DIAPHRAGMS AND SPECIAL MOMENT-RESISTING CONCRETE FRAMES.
19. PERIODIC SPECIAL INSPECTION IS REQUIRED FOR WOOD SHEAR WALLS, SHEAR PANELS, AND DIAPHRAGMS, INCLUDING NAILING, BOLTING, ANCHORING, AND OTHER FASTENING TO COMPONENTS OF THE SEISMIC FORCE RESISTING SYSTEM. SPECIAL INSPECTION BY A DEPUTY INSPECTOR IS REQUIRED WHERE THE FASTENER SPACING OF THE SHEATHING IS MORE THAN 4 INCHES ON CENTER.
20. FASTENERS IN PRESERVATIVE TREATED WOOD OR FIRE RETARDANT WOOD SHALL BE OF HOT DIPPED ZINC COATED GALVANIZED STEEL OR STAINLESS STEEL.
21. FIELD WELDING TO BE DONE BY WELDERS CERTIFIED BY THE LADBS. CONTINUOUS INSPECTION IS REQUIRED.
22. A COPY OF THE LOS ANGELES RESEARCH REPORT AND/OR CONDITIONS OF LISTING SHALL BE MADE AVAILABLE AT THE JOB SITE.
23. PROVIDE A WEEP SCREED FOR STUCCO AT THE FOUNDATION PLATE LINE A MINIMUM 4" ABOVE THE EARTH OR 2" ABOVE PAVED AREAS.
24. HOLD-DOWN HARDWARE MUST BE SECURED IN PLACE PRIOR TO FOUNDATION INSPECTION.
25. HOLD-DOWN CONNECTOR BOLTS INTO WOOD FRAMING REQUIRE APPROVED PLATE WASHERS; AND HOLD-DOWNS SHALL BE TIGHTENED JUST PRIOR TO COVERING THE WALL FRAMING. CONNECTOR BOLTS INTO WOOD FRAMING REQUIRE STEEL PLATE WASHERS IN ACCORDANCE WITH TABLE 2306.5 OF THE LABC.
26. FOUNDATION ANCHOR BOLTS IN WALLS WITH LATERAL LOADS GREATER THAN 300 POUNDS/FOOT SHALL HAVE AN APPROVED PLATE WASHER UNDER EACH NUT; AND THE NUTS SHALL BE TIGHTENED JUST PRIOR TO COVERING THE WALL FRAMING.
27. U.N.O. THE FOUNDATION BOLTS SHALL BE 5/8" DIA. WITH 3"X3"X1/4" PLATE WASHERS EMBEDDED AT LEAST 9 INCHES INTO THE CONCRETE (OR) MASONRY FOUNDATION SPACED NOT MORE THAN 6 FEET APART.
28. MIN 2 BOLTS PER PIECE OF SILL PLATE AND ONE LOCATED WITHIN 12" AND NOT LESS THAN 7 BOLT DIAMETER OR 4-3/8" OF EACH END OF EACH SILL PLATE.
29. FOUNDATION SILLS SHALL BE NATURALLY DURABLE OR PRESERVATIVE-TREATED WOOD.
30. ALL BOLT HOLES SHALL BE DRILLED 1/32" TO 1/16" OVERSIZED. PLATE WASHERS ARE REQUIRED FOR ALL HOLDOWNS.
31. ALL FOUNDATION EXCAVATIONS MUST BE OBSERVED AND APPROVED BY THE PROJECT ENGINEERING GEOLOGIST AND/OR PROJECT GEOTECHNICAL ENGINEER PRIOR TO PLACEMENT OF REINFORCING STEEL.
32. IF ADVERSE SOIL CONDITIONS ARE IN ENCOUNTERED, A SOILS INVESTIGATION REPORT MAY BE REQUIRED.
33. PROVIDE LEAD HOLE 40%-70% OF THREADED SHANK DIAMETER AND FULL DIAMETER FOR SMOOTH SHANK PORTION.
34. FASTENERS IN PRESERVATIVE TREATED WOOD OR FIRE RETARDANT WOOD SHALL BE OF HOT DIPPED ZINC COATED GALVANIZED STEEL OR STAINLESS STEEL.
35. NEW CONCRETE SHALL HAVE MINIMUM 28 DAY STRENGTH OF 3000 PSI. U.N.O.
36. ALL STRUCTURAL WOOD SHALL BE DOUGLAS FIR LARCH SPECIES PER INFORMATION SHOWN ON SHEET S1 WITH 19% MAXIMUM MOISTURE CONTENT U.N.O.
37. DEPUTY INSPECTION IS REQUIRED FOR SET-XP EPOXY.

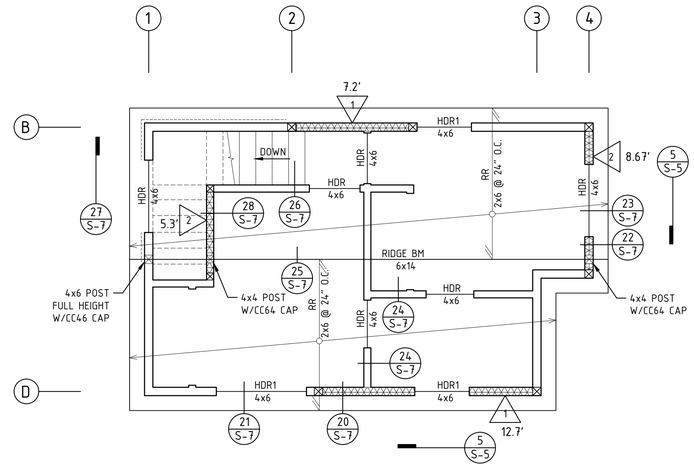

ROOF FRAMING PLAN

SCALE: 1/4"=1'

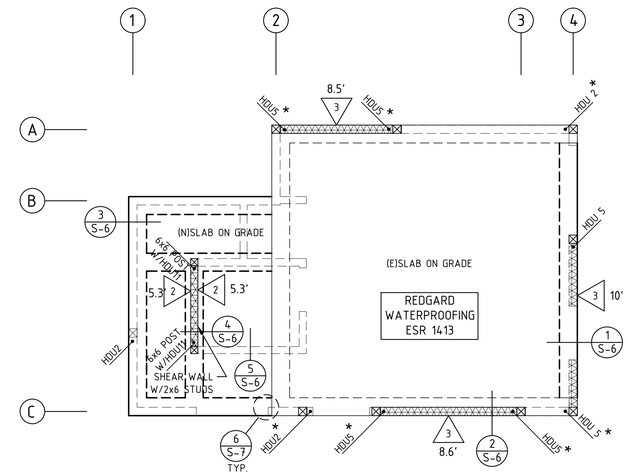

FOUNDATION PLAN

SCALE: 1/4"=1'

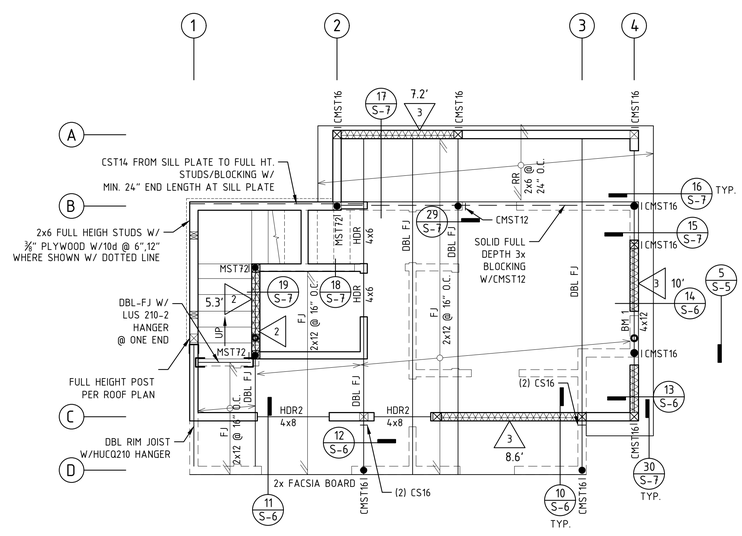

SECOND FLOOR FRAMING PLAN

SCALE: 1/4"=1'

LEGEND:

- FRAMING MEMBERS
- FRAMING BOUNDARY
- POST FROM ABOVE ON TOP OF BEAM/HEADER
- POST W/STRAP OR HOLDOWN FROM ABOVE ON TOP OF BEAM/HEADER
- 4x4 POST (U.N.O.)
- POST FROM ABOVE ON TOP OF POST BELOW
- POST FROM ABOVE W/STRAP OR HOLDOWN ON TOP OF POST BELOW
- 4x4x1/4 HSS POST (U.N.O.)
- SHEAR WALL PER PLAN
- CONCRETE SHEAR WALL PER PLAN
- EXISTING FOUNDATION
- NEW FOUNDATION
- NEW GRADE BEAM
- HDU2* — USE SET-XP EPOXY PER SEC. 1/- LARR# 25744

FLOOR SHEATHING

3/4" THICK PLYWOOD C-D EXT INDEX 32/16 W/10d COMMON NAILS @ 4",4",12" O.C.
BLOCK ALL UNSUPPORTED PLYWOOD EDGES W/2x4 FLAT BLOCKING, TYPICAL - U.N.O. W/ RADIANT BARRIER

ROOF SHEATHING

3/8" THICK PLYWOOD C-D EXT INDEX 32/16 W/10d COMMON NAILS @ 6",6",12" O.C.
BLOCK ALL UNSUPPORTED PLYWOOD EDGES W/2x4 FLAT BLOCKING, TYPICAL - U.N.O. W/ RADIANT BARRIER

STEN ENGINEERING
CIVIL AND STRUCTURAL
501 S. BRAND BLVD., SUITE 3
SAN FERNANDO, CA 91340
(323)486-4151
STENENGINEERING.COM

No	DATE	REVISIONS	BY

FOUNDATION & FRAMING PLAN

ADDRESS: 311 ORANGE GROVE, ALHAMBRA, CA 91803
OWNER:

SEAL

DRAWN:	E.N.
CHECKED:	T.S.
DATE:	11/10/2021
SCALE:	1/4"=1'
JOB #:	21-15-156

SHEET: S3